ELECTRIC

turbofan®

COMBI
40T SERIES
EC40T40

Technical data sheet for

EC40T40

Full Size 40 Tray Touch Electric Combi Oven



EC40T40
Unit shall be a Moffat electrically heated Turbofan direct steam injection combination convection steam oven. The oven shall have a stainless steel oven chamber with 40 x 1/1 GN capacity, 73.2 kW power rating and a 2 speed auto-reversing direction fan. Oven door shall be vented, safe to touch and feature LED oven chamber lighting. Automatic one touch display that can be configured based on the needs of the user that provide convection, steam, and combi cooking mode selection.
Unit shall be supplied in 100% recyclable shipping packaging.

STANDARD FEATURES

- Electric direct steam version
- 40 x 1/1 GN or 20 x 2/1 GN tray capacity
- 63mm tray spacing
- 73.2kW heating power
- Variable fan speed with up to 6 speeds
- Manual cooking with three cooking modes – Convection (30°C-300°C), Steam (30°C-130°C), Combi (30°C-300°C)
- Boosted pre-heating at 320°C
- Fast-Dry Boosted® - automatic system for quick dehumidification of the cooking chamber
- Night cooking - low temperature cooking and subsequent holding with minimum weight loss and low power consumption
- Autoclima® system that automatically manages the perfect climate in the cooking chamber
- Just-in-time (JIT) mode allows different food items to be taken out of the oven at the same time
- MULTILEVEL PLUS - multi-level function on each shelf means doubling production capacity (patented)
- High-definition 10-inch capacitive LCD colour touch screen function – configurable based on user preferences
- Programmable modes: create and save a recipe with its cooking methods in an automatic sequence (up to 15 cycles) giving each programme its own name, picture and information
- Intelligent recognition of recipes in multilevel folders
- ICS (Interactive Cooking System), an automatic cooking system for preset recipes including their history, ingredients, cooking accessory, procedure, automatic cooking programme and picture
- Automatic one touch cooking (ICS)
- Auto reverse (automatic inversion of the direction of the fan) for perfectly uniform cooking
- ECOVAPOR – automatic control of the steam saturation in the cooking chamber
- Core temperature probe
- Vapour Cleaning System (VCS) automatic washing system caters for cleaning with reduce detergent usage in the chamber
- 7 automatic wash programs – manual, rinse, fast, soft, medium eco, hard eco, grill
- Wash Management System (WMS) – preschedule washing programs based on combi use
- USB connection to download HACCP data, software update and cooking programme management
- Wi-Fi connectivity
- Low consumption LED cooking chamber lighting
- Self-diagnostic with smart error viewing
- Door with rear ventilation, double tempered glass front with air chamber and interior heat-reflecting glass
- Internal glass that folds for easy cleaning
- Cooking chamber in 1mm thick AISI 304 stainless steel with fully rounded edges for best airflow and easy cleaning
- Externally fitted hand shower
- Triple action water filter cartridge and filter head included

ACCESSORIES

- Extraction hood

MOFFAT

ELECTRIC

turbofan®

COMBI
40T SERIES
EC40T40

EC40T40 Full Size 40 Tray Touch / Electric Combi Oven

MOFFAT

moffat.com.au
moffat.co.nz

Dimensions

Width	1102mm
Depth	932mm
Height	1812mm
Weight	315kg

Packed Dimensions

Width	1290mm
Depth	1180mm
Height	2040mm
Weight	364.2kg
Volume	3.11m³

Shelves

1/1 GN	40
2/1 GN	20
Shelf Spacings	63mm

Power connection requirements

Multi pole circuit breaker and all pole disconnection isolator switch installed near the appliance.

Electrical requirements

400-415V, 50Hz, 3P+N+E, 73.2kW, 110A

Water connection requirements

Water Supply
2 x R3/4 connections
Cold Water
Flow pressure 200-500 kPa
Shut off valve with back flow prevention

Water Quality

total hardness	60-90 ppm
pH	> 7.5
Cl-(chloride)	max. 30 mg/l
Cl2 (free chlorine)	max. 0.1 mg / l
Fe (iron)	max. 0.1 mg / l
NH2Cl (monochloramine)	max. 0.2 mg /l
cold water temperature	max. 30° C
Electrical conductivity	50 - 200 uS

Drain

- 50 mm outlet
- Minimum fall/slope for waste 4°
- Drain must be outside oven perimeter

INSTALLATION CLEARANCES

Installation requirements (for precise installation instructions, please refer to the unit's installation manual).

- rear	50mm
- right	500mm*
- left	50mm

* A minimum of 500mm clearance must be maintained on one of the sides for servicing.

The unit cannot be installed in a recess.

If heat sources are located near the Turbofan Combi, ensure that a minimum distance of 400mm is maintained, on the right hand side.

Install in accordance with local body regulations only on horizontal surfaces and not against combustible walls.

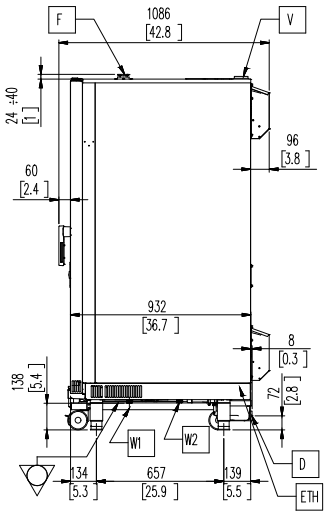

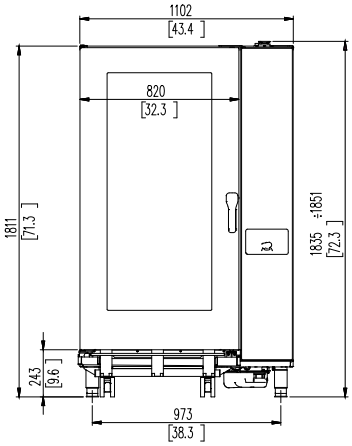

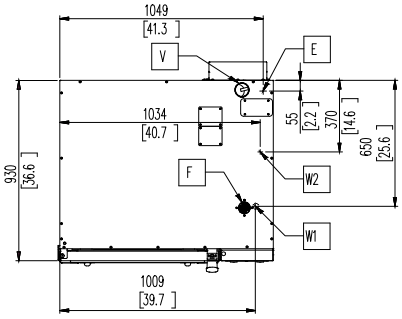

A Technical compartment cooling air intake
D Liquid discharge
E Electric power supply cable inlet
F Cooking chamber air intake
G Gas inlet
V Steam vent and cooking chamber pressure drop safety device
W1 Water inlet
W2 Softened water inlet
△ Equipotential connection
Ethernet connection

Australia
moffat.com.au
Moffat Pty Limited
Victoria/Tasmania
740 Springvale Road
Mulgrave, Victoria 3170
Telephone +613-9518 3888
Facsimile +613-9518 3833
vsales@moffat.com.au
New South Wales
Telephone +612-8833 4111
nswsales@moffat.com.au
South Australia
Telephone +613-9518 3888
vsales@moffat.com.au
Queensland
Telephone +617-3630 8600
qldsales@moffat.com.au
Western Australia
Telephone +618-9413 2400
wasales@moffat.com.au

New Zealand
moffat.co.nz
Moffat Limited
Rolleston
45 Illinois Drive
Izone Business Hub
Rolleston 7675
Telephone +64 3-983 6600
Facsimile +64 3-983 6660
sales@moffat.co.nz
Auckland
Telephone +64 9-574 3150
sales@moffat.co.nz

24:7 Service Support

© Copyright Moffat Ltd
AN.TC.01.26