Blue Seal Electric Bratt Pan

Installation and Use and Care Manual

E580 Series
Electric Bratt Pan



251291-1
September 2026
Effective: From Lot No. 2605000

Scan QR code* or visit www.moffat.com.
*Requires reader to be installed on your smartphone.

CONTENTS

Preface
General information 3
Safety information 3
Warranty 4

Specifications
Product information 5
Dimensions 6
Supply requirements 8
Clearances 8
Circuit schematic - bratt pan 9

Overview
General overview 11

Installation and setup
Unpacking the bratt pan 12
Assembling the bratt pan 13
Positioning the bratt pan 13
Connecting the electrical supply 13
Connecting the water supply 14
Levelling the bratt pan 14

Operation
Using the controls 16
Bratt pan operation 16

Troubleshooting
Fault finding 18

Care and maintenance
Maintenance schedule 19
Maintenance tasks 20

Parts
Supplied parts 21
Replacement parts 21
Accessories 21

Commissioning checklist
Pre-installation 23
Installation 23
Operation 23

THANK YOU

Thank you for purchasing this Blue Seal bratt pan. Your Blue Seal bratt pan is designed to provide years of reliable service.

This manual will provide you with the information you need to operate and maintain your bratt pan in the best possible way. Please read this manual carefully and refer to it frequently.

This manual must be kept for the entire life of the bratt pan. The manual must remain with the bratt pan, even if the bratt pan is transferred, sold, leased, or shared.

This manual must be stored carefully in the place where the bratt pan is used so that it is readily available to operators for consultation.

For your records

Model number	_____
Serial number*	_____
Date of purchase	_____
Date installed	_____
Installer	_____

*Find the serial number on your bratt pan's rating plate.

© 2026 Moffat | 251291-1

General information

The drawings and diagrams in this manual are representative only and not to scale. They supplement the written instructions and specifications that they refer to.

Copyright

© 2026 Moffat Limited

IMPORTANT
The reproduction or copying of any part of this manual by any means whatsoever is strictly forbidden unless authorised previously in writing by Moffat Limited.

Warranty requirements

IMPORTANT
Installations must be carried out by a certified or licensed service person only. Failure to comply will void any written or implied warranty.

IMPORTANT
Unauthorised alterations to the bratt pan may void warranties and approvals.

Intended use and restrictions

IMPORTANT
This bratt pan is intended for commercial use only, in kitchens of restaurants, canteens, and so on. It is not intended to be used as follows:

- In residential, outdoor, marine environments, or for the continuous mass-production of food.
- By persons with limited physical, sensory, or mental abilities.
- By persons who are not adequately trained in the operation and use of the bratt pan.
- By children.

- This bratt pan must only be used by operators who are adequately trained in the purpose, limitations, and hazards of its operation. To avoid the risk of accidents or damage, operators should be regularly trained.

Product disposal



This symbol on the bratt pan indicates that this bratt pan should not be treated as domestic or regular commercial waste, but must be correctly disposed of in order to prevent any negative consequences for the environment and human health. For further information on the recycling of this bratt pan, contact your local city office or your waste disposal service.

This bratt pan is built with common electrical, electromechanical, and electronic parts. No batteries are used.

The owner and operator are responsible for the proper and safe disposal of the bratt pan.

Safety information

Read the safety messages in this manual and follow the instructions carefully. Review them frequently.

Safety messages cannot cover every potential cause of injury or equipment damage but can highlight common causes of hazards. Read and understand all instructions in this manual prior to installing or servicing the bratt pan and seek advice before operating the bratt pan in a manner other than that described in this manual. Consult your authorised service technician before performing maintenance.

- Ensure that you and all users of this bratt pan understand every safety message.
- Know and observe all safety rules that may apply to your work situation and your work site.
- Replace the user manuals and safety labels immediately if they are missing or damaged.

Recognize safety information



Safety alert symbol.

When you see this symbol in the manual or on the bratt pan, pay special attention to the instructions.



Read the instructions before using the bratt pan.



Risk of electric shock.



Risk of burns–hot surface.



Equipotential bonding terminal–must be connected to equipotential bonding system.

This manual uses the following safety symbols to indicate the level of caution required when using the bratt pan.

⚠DANGER

Indicates an imminently hazardous situation that, if not avoided, will result in death or serious injury.

⚠WARNING

Indicates a potentially hazardous situation that, if not avoided, could result in death or serious injury.

⚠CAUTION

Indicates a hazardous situation that, if not avoided, could result in minor or moderate injury.

NOTICE

Indicates information considered important, but not hazard-related (for example, messages relating to property damage).

General safety

⚠WARNING

Improper installation, adjustment, alteration, service, or maintenance can cause property damage, injury, or death. Read the installation, operation, and maintenance instructions thoroughly before installing or servicing this bratt pan.

⚠DANGER

Fire hazard. Do not use or store flammable materials in or near this bratt pan. Do not spray aerosols in the vicinity of this bratt pan while it is in operation.

⚠WARNING

Fire hazard. The bratt pan operator shall take great care to use the bratt pan safely and guard against risk of fire. The bratt pan must not be left unattended during use.

NOTICE

The bratt pan shall be regularly inspected by a competent service person to ensure that it is in safe and correct order for operation.

⚠CAUTION

Do not operate this bratt pan without the supplied legs fitted to it.

Warranty

Moffat warrants all equipment supplied by Moffat against defects in material and workmanship.

Visit www.moffat.com for warranty terms and conditions or contact our Customer Care team.

© 2026 Moffat | 251291-1

SPECIFICATIONS

Product information

The E580 is a commercial heavy duty, high efficiency bratt pan for modular kitchens, constructed in easy clean stainless steel external finish.

Your bratt pan has the following features:

- Stainless-steel sheathed heating elements that are fixed to the bottom of the pan for even heat distribution.
- Electric thermostat burner control for precise temperature control.
- Overtemperature safety cut-out system.
- Full stainless-steel pan with 2 mm thick body and 12 mm thick base.

Model identification

Your bratt pan may have additional features. The model code on the bratt pan's rating plate identifies the model type.

E580-8[1] *80 l capacity, manual tilt controls*
E580-8E[1] *80 l capacity, electric tilt controls*
E580-12[1] *120 l capacity, manual tilt controls*
E580-12E[1] *120 l capacity, electric tilt controls*

Where:

[1] **Back options**
L - Low-back
H - High-back

Dimensions

All dimensions are in mm.

Electrical supply entry point Water supply entry point

Manual tilt models

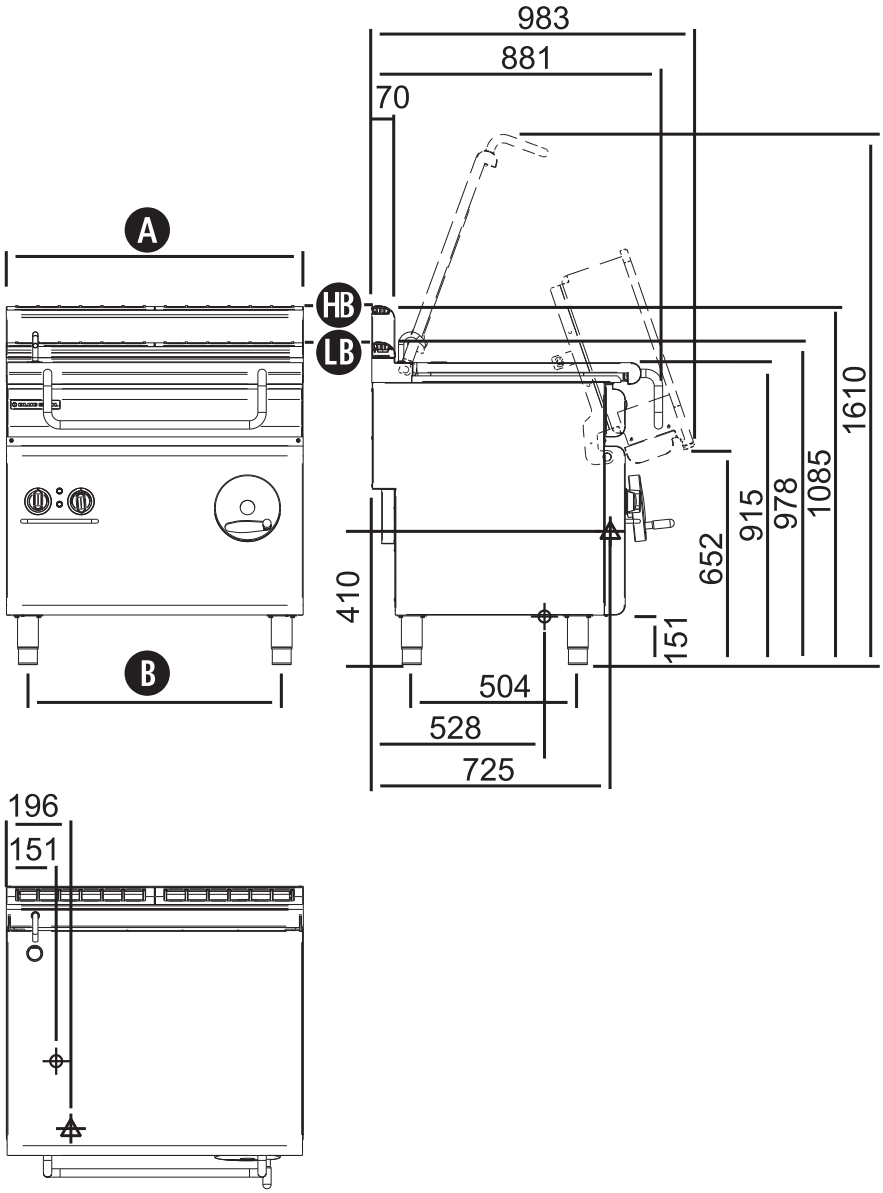

	G580-8x	G580-12x
A	900	1200
B	769	1069

© 2026 Moffat | 251291-1

Electric tilt models

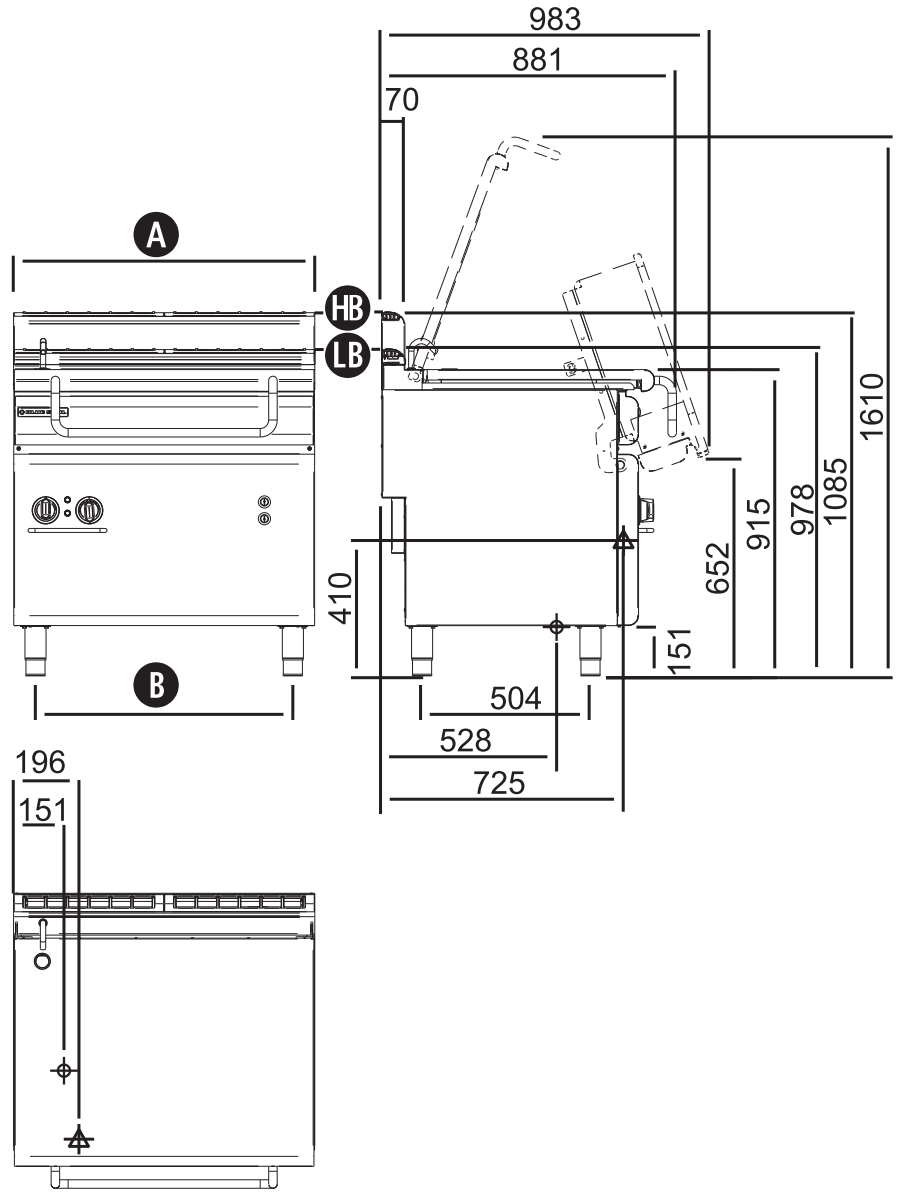

	G580-8Ex	G580-12Ex
A	900	1200
B	769	1069

Supply requirements

Electrical supply - bratt pan

Model	Electrical supply			Nominal rating			
	Power	Voltage [Vac]	Frequency [Hz]	Power input [kW]	Current [A]		
					L1	L2	L3
E580-8/E580-12	3 P+N+E	400-415 3N~	50 / 60	12.0	16.4	16.4	16.4
		380-400 3N~	50 / 60	12.0	16.4	16.4	16.4
		380-415 3N~	50 / 60	12.0	16.4	16.4	16.4
E580-8E/E580-12E	3 P+N+E	400-415 3N~	50 / 60	17.0	23.2	23.2	23.2
		380-400 3N~	50 / 60	17.0	23.2	23.2	23.2
		380-415 3N~	50 / 60	17.0	23.2	23.2	23.2

Electrical connection requirements

- An isolation switch shall be fitted within 2 m of the bratt pan, but not on the bratt pan and in such a position that the user does not have to reach across the cooking surface.
- The supply cord shall be oil-resistant, sheathed flexible cable and not lighter than ordinary polychloroprene, or other equivalent synthetic elastomer sheathed cord (as per AS / NZS 3191 part 2.10.11. or IEC 60245-IEC-57); for example, H05 RN-F type.
- The branch supply line shall be individually overload protected to the correct current rating and the supply cord shall be protected against any mechanical or thermal damage.
- All wiring connections must be tight.
- The size of the cable supply to the bratt pan shall be appropriate for the current drawn on the line. Refer to the appropriate wiring standards for the cable size required.
- If the bratt pan is intended to be moved for cleaning, then it shall be installed with a flexible power supply cord and equipotential bonding connections, such that the bratt pan can be moved forward not less than 1320 mm without the flexible connections becoming taut or strained.
- A Residual Current Device (RCD) is recommended for protection of the power supply to this bratt pan.

Water supply

Minimum water supply pressure	22psi (150 kPa)
Maximum water supply pressure	80 psi (550 kPa)
Connection size	¾" male (20 mm) O/D copper tube

Clearances

NOTICE

This bratt pan should only be placed in close proximity to walls, partitions, furniture, or other surfaces if they are made of or cladded with non-combustible material.

Position the bratt pan with the following minimum clearances:

	Non-combustible surface	Combustible surface
Left / Right	0 mm	50 mm
Rear	0 mm	50 mm

© 2026 Moffat | 251291-1

Circuit schematic - bratt pan
E580-8 / E580-12

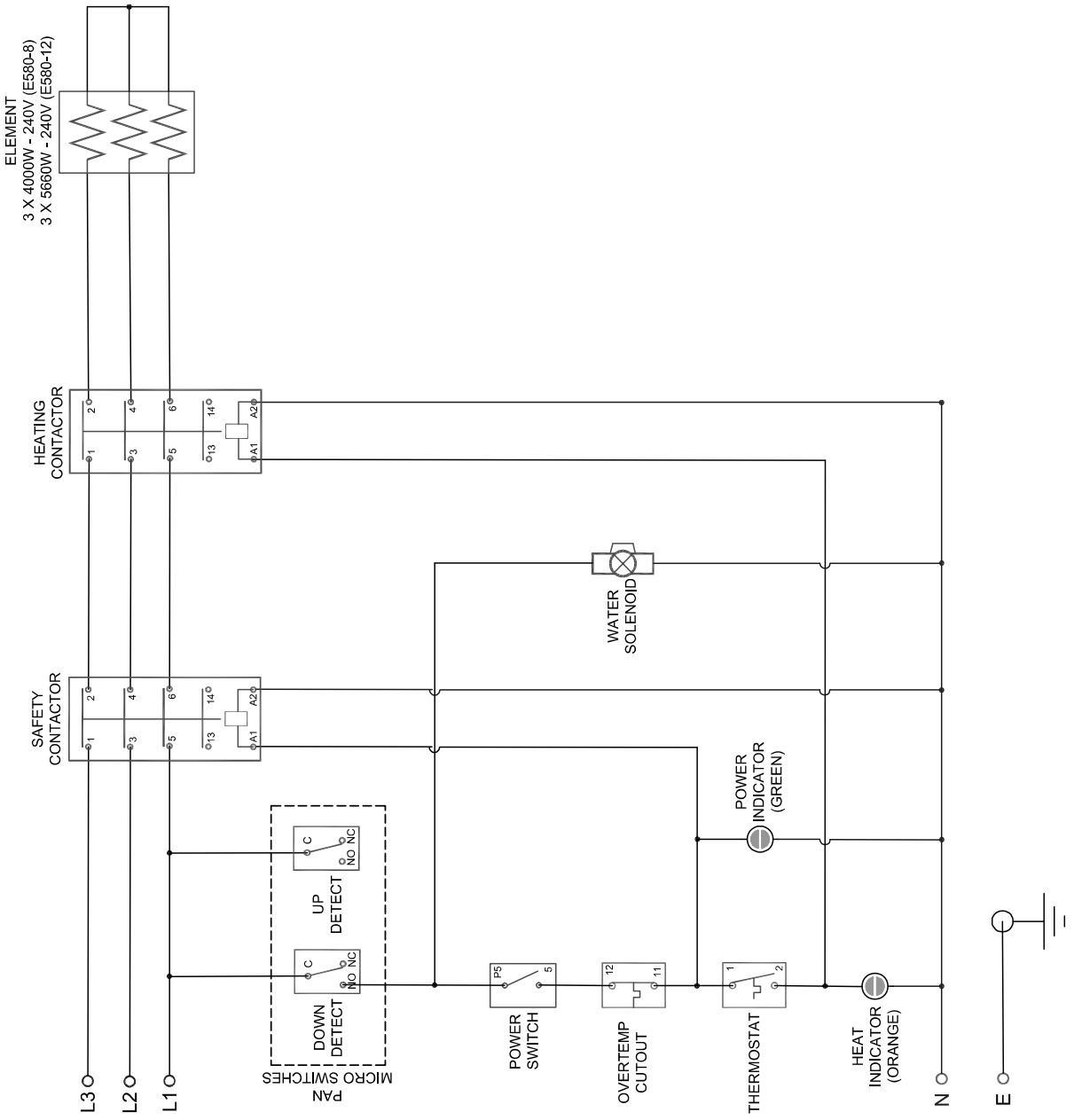

E580-8E / E580-12E

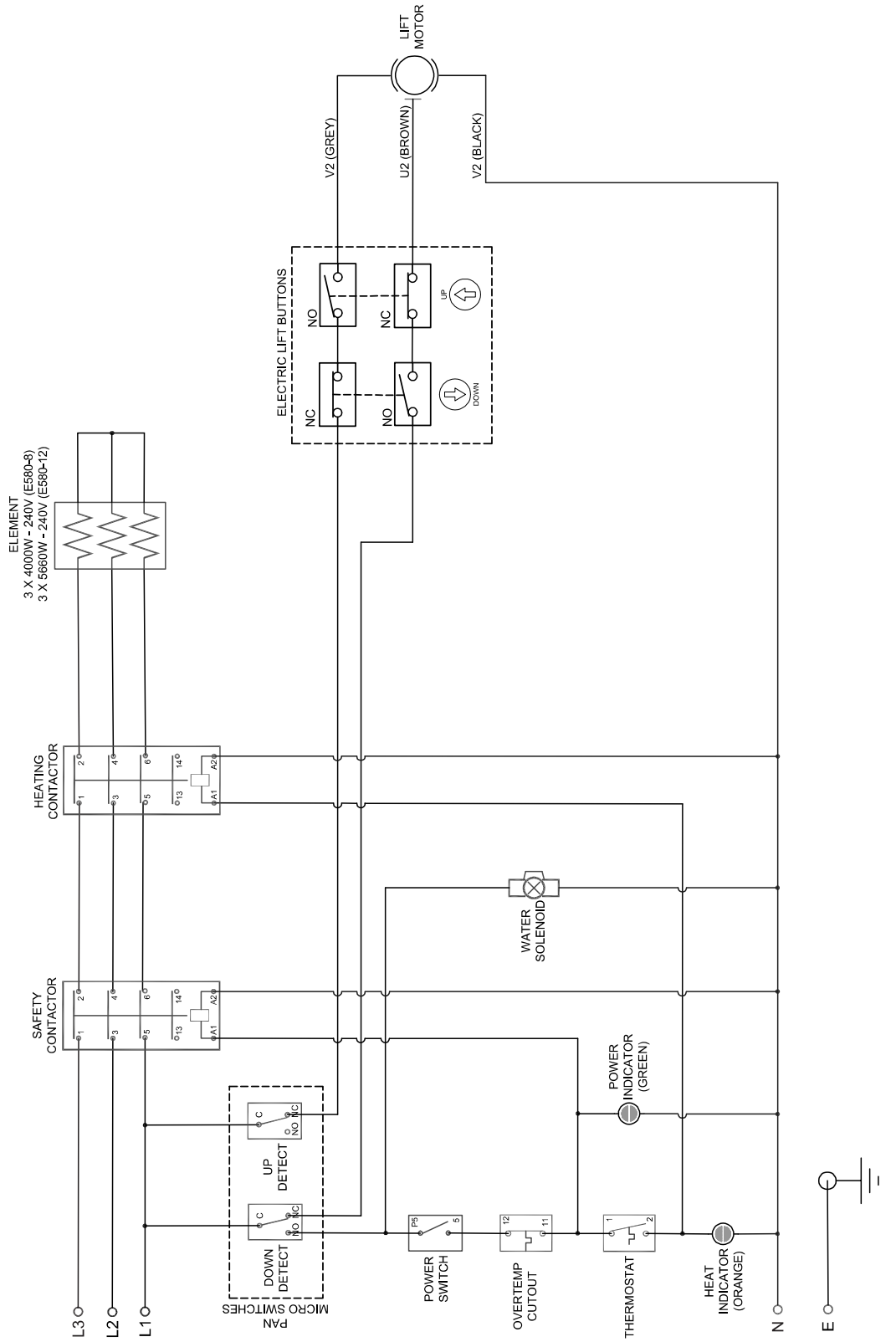

© 2026 Moffat | 251291-1

OVERVIEW

General overview

Manual tilt models

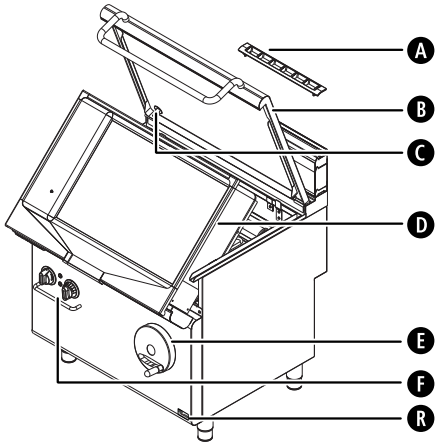

A	Splashback casting	B	Lid
C	Water spout	D	Pan
E	Pan tilt	F	Heating and water controls
R	Rating plate		

Electric tilt models

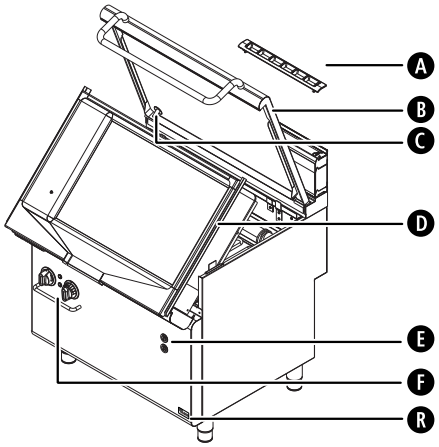

A	Splashback casting	B	Lid
C	Water spout	D	Pan
E	Pan tilt	F	Heating and water controls
R	Rating plate		

INSTALLATION AND SETUP

Your bratt pan is designed to provide years of satisfactory service, and correct installation is essential for the best performance, efficiency, and trouble-free operation. It is of utmost importance that this bratt pan is installed correctly and that operation is correct before use.

Complete the commissioning checklist in this manual before commissioning the bratt pan.

⚠WARNING

Installations must be carried out by qualified service persons only. Failure to install equipment to the relevant codes and the manufacturer's specifications in this manual will void the warranty.

⚠WARNING

The bratt pan installation must conform to national installation codes and local and national codes for fire safety.

Australia and New Zealand
AS/NZS 3000 Wiring Rules

United Kingdom
BS 6173 Installation of Catering Appliances.
BS 5440 1 & 2 Installation Flueing & Ventilation.
BS 7671 Requirements for Electrical Installation.

US and Canada
ANSI / NFPA70 National Electrical Code.
CSA C22.2 Canadian Electrical Code.

NOTICE

The bratt pan installation must conform to national installation codes and local and national codes for plumbing and drainage.

Australia and New Zealand
AS/NZS 3500 Plumbing & Drainage.

Europe
EN 1717 Protections of water installations.

Unpacking the bratt pan

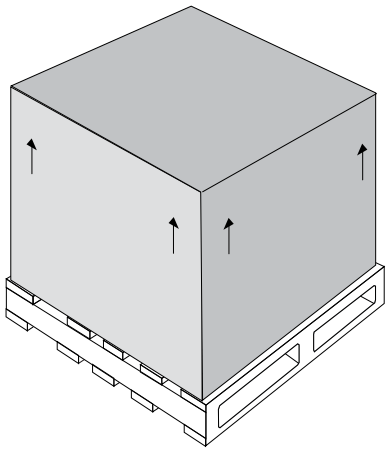

1. Carefully remove all packaging and transit protection from the bratt pan including all protective plastic coating from the exterior stainless steel panels.
   Do not discard the carton and other packaging material until you have inspected the appliance for transit damage and have tested it for proper operation.
2. Remove the protective film from the stainless steel panels, taking care not to scratch the surface if using a blade or shim.

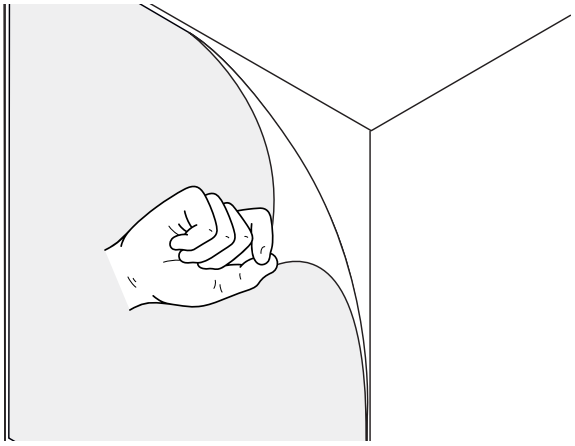

3. Check equipment and parts for damage. Report any damage immediately to carrier and distributor.
4. Check that the supply specifications on the rating plate are correct for your location and installation requirements.
5. Check that all parts are supplied with the product. See Parts on page 21.

© 2026 Moffat | 251291-1

Assembling the bratt pan

This bratt pan is delivered fully assembled. No further assembly is required.

This bratt pan is fitted with adjustable feet to enable the bratt pan to be positioned securely and level. Level the bratt pan only after you have completed the supply connections. See Levelling the bratt pan on the next page.

NOTICE

This bratt pan is intended for stationary installations and must only be installed with the adjustable feet supplied.

Do not install rollers or castors to the base of this bratt pan.

Fitting optional accessories

This bratt pan can be fitted with optional accessories. See Accessories on page 21 for more information.

Refer to the instructions provided with the optional accessories to fit them to the bratt pan.

Positioning the bratt pan

⚠CAUTION

Position the bratt pan so that the control panel and bratt pan cooking area is easily reachable for loading and unloading.

Clearances

NOTICE

This bratt pan should only be placed in close proximity to walls, partitions, furniture, or other surfaces if they are made of or cladded with non-combustible material.

Position the bratt pan with the following minimum clearances:

	Non-combustible surface	Combustible surface
Left / Right	0 mm	50 mm
Rear	0 mm	50 mm

Connecting the electrical supply

Ensure that you meet the electrical connection requirements. See Electrical connection requirements on page 8

⚠WARNING

All electrical connections must only be carried out by a suitably qualified person.

⚠WARNING

The bratt pan must be earthed (grounded).

⚠WARNING

If the power supply cord is damaged, it must be replaced by a suitably qualified person in order to avoid a hazard.

NOTICE

Each bratt pan should be connected to an adequately protected power supply with an appropriate power cord.

Check that the electricity supply is correct as shown on the bratt pan's rating plate.

Ensure that a cable gland is fitted around the wiring entry hole into the bratt pan.

Electrical supply connection

1. For a manual tilt bratt pan(E580), remove the handwheel.

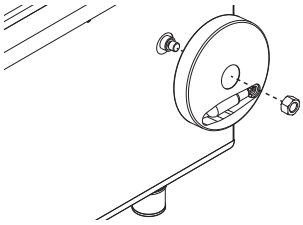

2. Remove gas and water control knobs.
3. Remove the front panel.
4. Remove the rear panel.
5. Bring the supply cable through the compression gland at the rear of the bratt pan through to the front of the unit.

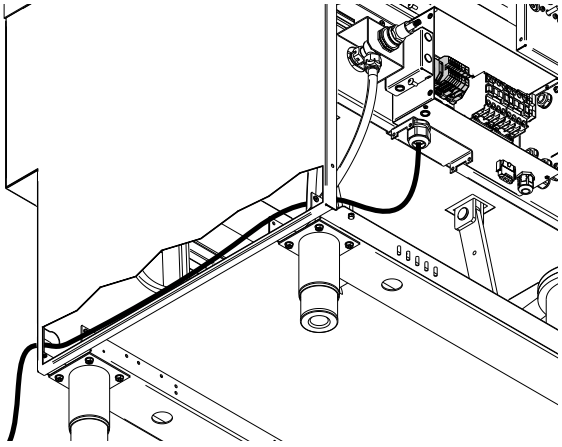

6. Connect the mains supply to the appropriately marked terminals on the terminal block. See Terminal block wiring connection below.

7. Tighten the cable entry gland to secure the cable to the bratt pan.

IMPORTANT
Check that the cable is securely connected and fastened by pulling the cable from the outside of the bratt pan.

8. Connect supply plug to mains outlet.
9. Turn on the mains supply and ensure that the bratt pan is powered-up.

Terminal block wiring connection

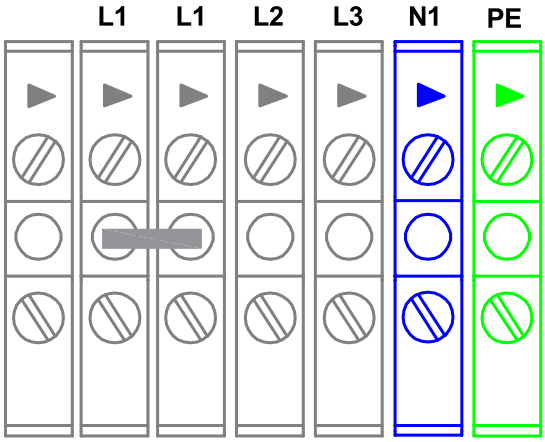

1. Connect the mains supply according to the terminal block label that is fitted to the bratt pan.
2. Ensure that the conductors are secure and appropriately terminated for all connections.
3. Tighten the cable entry gland to secure the cable to the bratt pan.

IMPORTANT
Check that the cable is securely connected and fastened by pulling the cable from the outside of the bratt pan.

4. Check that the polarity of each connection is correct and matches the terminal markings on the bratt pan.

Connecting the water supply

A cold water supply must be connected to the water inlet connection on this bratt pan.

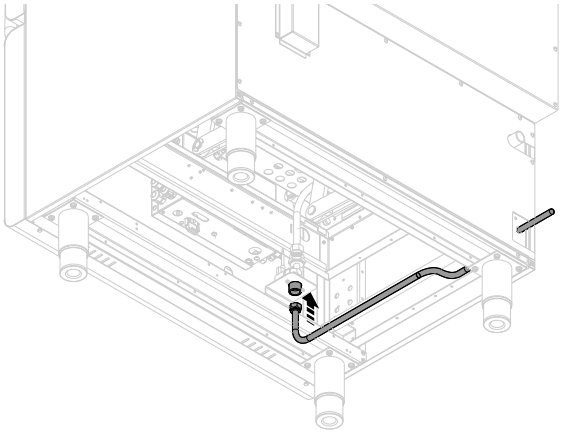

Water backflow protection (WMTS-101 compliant) is incorporated in this bratt pan.

NOTICE

The water supply shall meet the requirements for use in Electric Bratt Pan systems. See Supply requirements on page 8.

NOTICE

Water connection shall be installed in accordance with local water regulations in force and the applicable standard or code (for example, PCA in Australia, EN 1717 in UK / IE, and so on).

NOTICE

The water supply must be fitted with a sediment filter / strainer at the connection point into the bratt pan.

NOTICE

All water pipework must be thoroughly flushed once the bratt pan installation is completed.

Levelling the bratt pan

Correctly locate the bratt pan into its final operating position and, using a spirit level, adjust the bratt pan feet so that the bratt pan is level and at the correct height.

Check that all feet are securely fitted.

Ensure that the pan and the lid are in the fully lowered position.

© 2026 Moffat | 251291-1

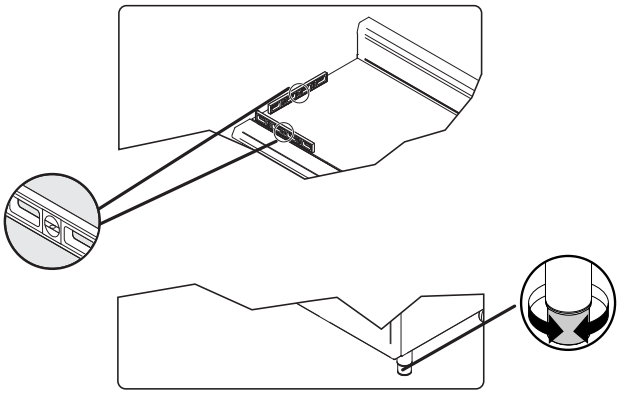

OPERATION

Using the controls

Thermostat control

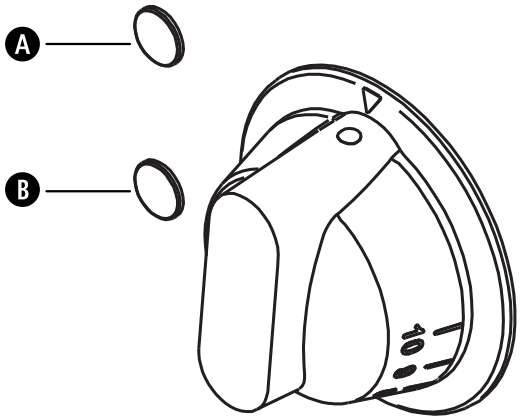

A power (A) indicator light and heating indicator light (B) are located beside the thermostat control.

The control knob settings for the thermostat are as follows:

○ Off
1 - 10 Temperature setting

Bratt pan operation

- Rotate the thermostat control knob anticlockwise to the temperature required.
  - The temperature is thermostatically controlled at the selected heat setting.
  - The heating element operates only when the thermostat is set to a temperature and the pan is fully lowered.

Filling water into the pan

- Ensure that the pan is fully lowered and the pan lid is up.
- Turn the water tap anticlockwise to begin filling the tank.

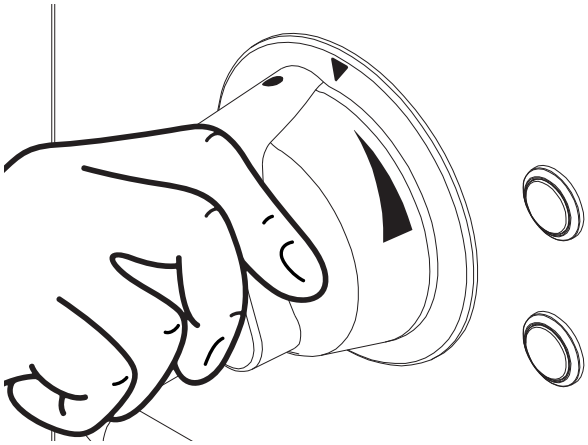

- A ¼ turn anticlockwise fully opens the tap.

Tilting the pan

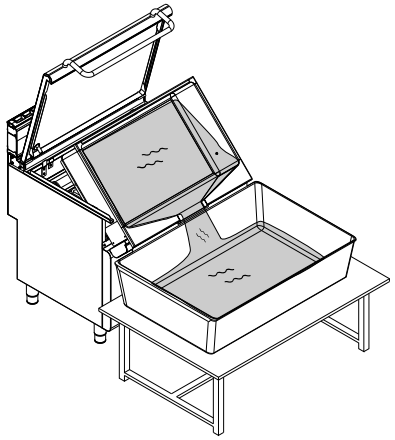

NOTICE

Ensure that the pan lid is raised and that there is adequate clearance in front and around the pan before it is raised to avoid damaging the bratt pan

- Ensure that the pan lid is in the fully raised position before tilting the pan up.
- Ensure that the space behind and on both sides of the pan is clear of any obstructions before tilting the pan down.

© 2026 Moffat | 251291-1

- For a manual tilt bratt pan(E580):
  - Flip out the stored handle on the handwheel.
  - Rotate the handwheel clockwise to tilt the pan.

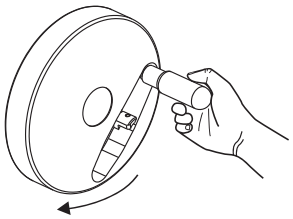

  - The heating element switches off automatically when the pan is raised.
- For an electric tilt bratt pan (E580E):
  - Press and hold the pan tilt button.

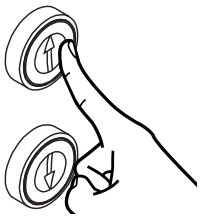

  - The tilt operation stops when the button is released.
  - The heating element switches off automatically when the pan is raised.

Turning off the bratt pan

- Rotate the thermostat control knob to the off O position.

After-use cleaning

Cleaning the pan

- Clean the interior of the pan regularly after each use using a mild detergent solution and a soft cloth or soft bristled brush.
- Dry the pan thoroughly after cleaning it with a dry, clean cloth.

TROUBLESHOOTING

This section provides a reference to the more common problems that may occur during the operation of your bratt pan. This fault finding guide is intended to help you correct and accurately diagnose problems with your bratt pan.

When fault finding a problem, always use a process of elimination starting with the simplest solution and working through to the most complex. Never overlook the obvious.

Fault finding

Fault	Possible causes	Remedy
The overtemperature thermostat cuts out.	The overtemperature thermostat is faulty.	Call for service.
	The control thermostat does not maintain the set temperature - thermostat out of calibration.	Call for service.
	The control thermostat does not maintain the set temperature - thermostat does not open on temperature rise.	Call for service.
	The control thermostat does not maintain the set temperature - thermostat opens on temperature rise but the control valve does not respond.	Call for service.
The main element does not operate.	The mains isolating switch, circuit breaker, or fuses are off at the power board.	Turn on the main isolating switch.
		Check the fuses at the power board.
	The pan is in the upright position or is not fully lowered.	Check that the pan is fully lowered. Call for service.
	The thermostat is not correctly set or the control knob for the main element is not set to the heating position.	Set the thermostat correctly for operation. See Operation on page 16. Call for service.
The water spout does not work.	The pan is in the raised position.	Lower the pan fully.
	The main water supply is not connected.	Ensure that the water supply is connected and turned on.
	The water solenoid is faulty.	Call for service.
	The inlet filter screen is blocked.	Call for service.

© 2026 Moffat | 251291-1

CARE AND MAINTENANCE

To achieve the best results, clean your bratt pan regularly and thoroughly. If small faults occur, have them attended to promptly. Don't wait until they cause a complete breakdown.

⚠CAUTION

Always turn off the electrical power at the mains supply before cleaning the bratt pan.

⚠WARNING

Do not use flammable solvents and cleaning aids on or in close proximity to, the bratt pan when the bratt pan is still hot.

NOTICE

- This bratt pan is not water proof. Do not use water jet spray or steam cleaner to clean interior or exterior of the bratt pan.
- Carefully read and follow the safety instructions on the label of the cleaning product to be used.
- Do not use cleaning products with an acidic base or those containing chlorine.
- Do not use saline or sulphuric acid preparations to descale the bratt pan.
- Do not use sharp scrapers or harsh abrasive scourers as they could damage the bratt pan.
- Immediately clean alkaline spills (such as salty liquids) or acidic spills (such as lemon juice or vinegar) from cooking surfaces or enamel.
- Ensure that any detergent or cleaning material has been completely removed after each cleaning.

Maintenance schedule

	Daily	Weekly	Periodic
Clean the cooking area	✔		-
Clean the stainless steel surfaces	-	✔	-
Clean the outer body	✔*	-	
Empty and clean any debris or drainage receptacles	✔		
Check and adjust controls and mechanical parts**	-	-	Every 6 months
Full product service**	-	-	Every 6 months

* For a heavy cooking schedule, perform this task after each shift.

** To be conducted by a Moffat authorized service technician in full compliance with local and safety inspection and testing requirements.

For example: AU / NZ - AS / NZS 3760 for electrical equipment.

Maintenance tasks

General cleaning guidelines

After cleaning, always wipe the cooking area dry with a soft cloth.

Cleaning light soil

Clean light soil on the cooking surface with solution of hot water and mild detergent.

Cleaning baked-on soil (stainless steel surfaces)

Clean heavy, baked-on soil using a good quality stainless steel cleaner or stainless steel wool.

Only apply stainless steel cleaner when the bratt pan is cool and rub in the direction of the grain.

Cleaning baked-on soil (enamel surfaces)

Use an ammonia-based cleaner or an oven cleaner. Follow the cleaner manufacturer's instructions.

Cleaning the outer body

1. Thoroughly clean the splash back, the interior and exterior surfaces of the appliance with hot water, a detergent solution and a soft scrubbing brush.
2. Remove the splashback casting and wash it in hot soapy water with a soft-bristled brush.
3. Clean the control panel with a damp cloth lightly moistened with a solution of mild detergent and water. Dry the control panel thoroughly with a dry cloth and polish with a soft dry cloth.
4. Dry the appliance thoroughly with a dry cloth and polish with a soft dry cloth.

© 2026 Moffat | 251291-1

PARTS

Supplied parts

This bratt pan is not supplied with any additional parts or accessories.

Replacement parts

Quote the part number and description when ordering replacement parts. If the part required is not listed here, request the part by its description and quote your bratt pan's model number and serial number as shown on the rating plate.

NOTICE

Only genuine Blue Seal parts should be used for servicing or repair of this bratt pan.

NOTICE

Follow the instructions supplied with the replacement part when you install it. Contact a Blue Seal authorised service centre or our Customer Care team for additional information and service instructions.

	Part No.	Description
	247994	Thermostat control knob
	251425	Water valve knob
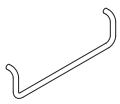	227848	Lid Handle For 900 mm models.
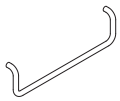	228849	Lid Handle For 1200 mm models.
	228123	Handwheel
	250992	Handwheel spacer sleeve
	044066	Handle nut - M16 x 2
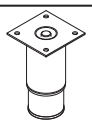	240534	Front leg assembly, 150 mm x Ø63mm C/W plate

Accessories

Accessories - plinth kits

Part No.	Description
251263	Plinth interface kit - 900 mm
251270	Plinth interface kit - 1200 mm

Accessories - kick panels

Part No.	Description	Notes
247126	Kick panel 900 mm x 140[1]	For 900 mm models.
247346	Kick panel 900 mm x 125[2]	
247364	Kick panel 900 mm x 75[3]	
247128	Kick panel 1200 mm x 140[1]	For 1200 mm models.
247348	Kick panel 1200 mm x 125[2]	
247366	Kick panel 1200 mm x 75[3]	
247135	Kick panel ends pair x 140[1]	
247373	Kick panel ends pair x 125[2]	
247376	Kick panel ends pair x 75[3]	

1 140 mm height kick panel for 915 mm bratt pan operating height.
2 125 mm height kick panel for 900 mm bratt pan operating height.
3 75 mm height kick panel for 850 mm bratt pan operating height.

© 2026 Moffat | 251291-1

COMMISSIONING CHECKLIST

Before leaving the new installation, check that the bratt pan functions in accordance with the operating instructions in this manual. Complete the following checklist.

If the bratt pan does not operate correctly, turn off the bratt pan, disconnect the power supply at the mains and contact the supplier of this bratt pan.

Date _____

Installer _____

Pre-installation

- ☐ Delivered intact with all parts and accessories.
- ☐ No noticeable damage to the interior or exterior of the bratt pan.

Installation

- ■ Positioning and fitting
  - ☐ Adequate separation and/or isolation from other appliances and/or heat sources.
  - ☐ Adequate ventilation in installation area.
  - ☐ The bratt pan is level with respect to the floor.
- ■ Electrical connection
  - ☐ Adequate supply voltage.
  - ☐ Correctly grounded outlet.
  - ☐ Correct current draw and loading.
- ■ Water connection
  - ☐ Adequate water supply pressure.
  - ☐ Water supply quality meets requirements.
  - ☐ Correctly sized water connector.
- ■ Water pipework
  - ☐ All water pipework has been thoroughly flushed after installation.
- ■ General
  - ☐ Correct door alignment.
  - ☐ All removable panels and receptacles have been refitted.
- ■ First use

⚠CAUTION

Ensure that all packaging material has been removed from the bratt pan before operation.

Operation

- ■ Functionality
  - ☐ The controls operate correctly. See Operation on page 16.
- ■ Operational readiness
  - ☐ All connections are correct and all covers are fitted.
- ■ Operator training
  - ☐ The operator has been instructed in correct operation and safe shutdown of the bratt pan.

BLUE SEAL CUSTOMER CARE

New Zealand
Moffat Limited
www.moffat.co.nz
Tel: +64 (3) 983 6600
Fax: +64 (3) 983 6660
Email: sales@moffat.co.nz

Canada
Serve Canada
www.servecanada.com
Sales: 800 551 8795
Service: 800 263 1455
Email: info@servecanada.com

International
Moffat Limited
www.moffat.com
Tel: +64 (3) 983 6600
Fax: +64 (3) 983 6660
Email: export@moffat.co.nz

Australia
Moffat Pty Ltd
www.moffat.com.au
Tel: +61 (03) 9518 3888
Service: 1300 264 217
Fax: +61 (03) 9518 3833
Email: vsales@moffat.com.au

United Kingdom
Blue Seal Limited
www.blue-seal.co.uk
Tel: 0121 327 5575
Service: 0121 332 6647
Fax: 0121 327 9711
Email: sales@blue-seal.co.uk

United States
Moffat Inc
www.moffat.com
Tel: 1 800 551 8795
Fax: 336 661 9546
Email: sales@moffat.com

an Ali Group Company

GROUP

the spirit of excellence